# 382

## Iron Flanged Wye Strainer

### Feature

- 125# WSP
- 200# WOG
- Iron body
- Flanged ends per ANSI B16.5
- SS304 perforated screen
- Bolted cap with clean out plug
- Upstream/downstream ¼" plugged test ports
- ¾" side port with plug



### Material

| | Part | Material | Specification |
|---|---|---|---|
| 1 | Body | Cast Iron / Ductile Iron[1] | A126-B / A536[1] |
| 2 | Screen | Stainless Steel | SS304 |
| 3 | Bonnet | Cast Iron / Ductile Iron[1] | A126-B / A536[1] |
| 4 | Plug | Steel | - |
| 5 | Cap Bolt | Steel | - |
| 6 | Gasket | EPDM | - |

[1] Ductile iron A536 for 8" and above

### Dimension, Weight

| Size DN | D [in] | D1 [in] | H [in] | L [in] | b [in] | C [in] | d [in] | N - h [in] | Clean out [in] | Cv | Wt. [lb] |
|---|---|---|---|---|---|---|---|---|---|---|---|
| 2½" | 7.01 | 5.51 | 5.91 | 10.75 | 0.75 | 1.18 | 0.039 | 4 - 0.75 | 1 | 80 | 23.6 |
| 3" | 7.52 | 5.98 | 6.89 | 11.50 | 0.79 | 1.18 | 0.039 | 4 - 0.75 | 1 | 116 | 33.0 |
| 4" | 9.02 | 3.58 | 7.68 | 13.86 | 0.79 | 1.18 | 0.118 | 8 - 0.75 | 1¼ | 205 | 46.5 |
| 5" | 10.00 | 8.50 | 9.25 | 16.54 | 0.87 | 1.18 | 0.118 | 8 - 0.88 | 1¼ | 325 | 65.4 |
| 6 | 10.98 | 9.49 | 10.83 | 18.50 | 0.91 | 1.18 | 0.118 | 8 - 0.88 | 1½ | 465 | 92.3 |
| 8" | 13.50 | 11.77 | 13.78 | 21.38 | 0.98 | 1.18 | 0.118 | 8 - 0.88 | 1½ | 845 | 132 |

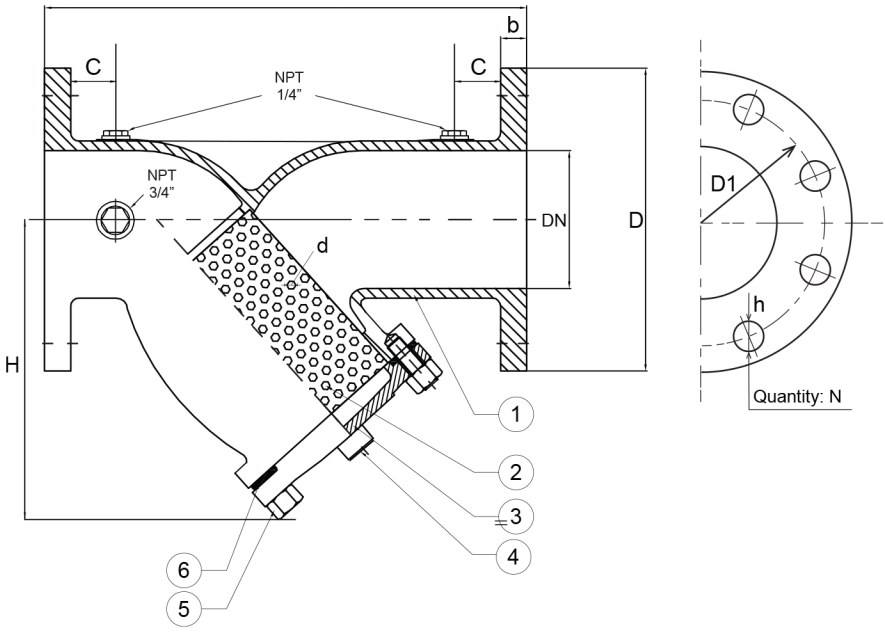


**WARNING**: This product can expose you to chemicals including lead, which is known to the state of California to cause cancer and birth defects or other reproductive harm. For more information go to www.P65Warnings.ca.gov



Drawings, photos and data are provided for information only and subject to change without notice. No part of this document may be reproduced copied, modified or adapted, without the prior written consent of the copyright owner, unless otherwise indicated.
The drinking Water Act has defined lead free as having the average wetted surface ratio of the fixture to contain less than .25% of lead per volume.

© 2026 RED-WHITE VALVE CORP. All Rights Reserved