7770

Carbon Steel Ball Valve

Feature

2000# WOG / 150#WSP
Carbon Steel 2-Piece Body
Threaded Ends
Regular Port
Blow-Out Proof Stem
Reinforced PTFE Seats
Locking Handle
MSS-SP-110



Material

	Part	Material	Specification
1	Lever Sleeve	Vinyl	
2	Lever	Steel (plated)	A36
3	Lever Nut	Steel (plated)	A36
4	Gland	Carbon Steel	A108
5	Stem	Stainless Steel	A276 316
6	Packing	PTFE	
7	Washer	PTFE	
8	Ball	Stainless Steel	A276 316
9	Gasket	PTFE	
10	Body Cap	Carbon Steel	A216 WCB
11	Body	Carbon Steel	A216 WCB
12	Seat	PTFE	

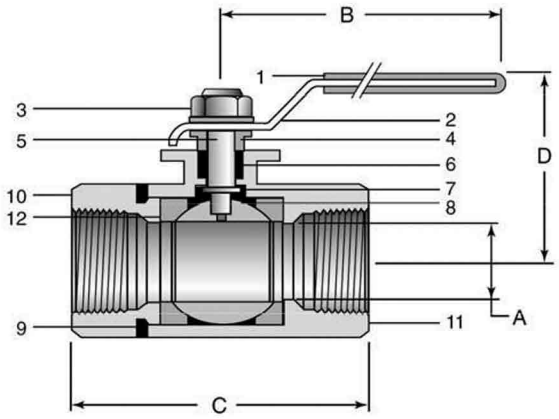

Dimension, Weight, Cv

Size	1/4	3/8	1/2	3/4	1	1-1/4	1-1/2	2
A	0.43	0.49	0.49	0.69	0.87	0.98	1.25	1.49
B	4	4	4	5	5	6	6	7.4
C	2.3	2.3	2.4	3.1	3.5	4	4.4	5.4
D	2	2	2	2.5	2.6	3.3	3.5	3.7
Wt. lbs	0.75	0.75	0.7	1.3	1.7	3.2	4.4	5.8
Cv	10	10	12	35	60	100	150	250

WARNING: This product can expose you to chemicals including lead, which is known to the state of California to cause cancer and birth defects or other reproductive harm. For more information go to www.P65Warnings.ca.gov

Drawings, photos and data are provided for information only and subject to change without notice. No part of this document may be reproduced copied, modified or adapted, without the prior written consent of the copyright owner, unless otherwise indicated.
The drinking Water Act has defined lead free as having the average wetted surface ratio of the fixture to contain less than .25% of lead per volume.

© 2025 RED-WHITE VALVE CORP. ALL RIGHTS RESERVED