8080MT

Expansion Tank Valve

Feature

600# WOG
DZR lead free brass body
Full port design
Chrome plated ball
Ball valve for expansion tank isolation
High flow hose drains with cap and chain
Adjustable packing gland
MNPT system connection
Virgin PTFE seats
Blow-out proof stem

DZR Dezincification Resistant



Working conditions:
Water: from 15°F to 260°F
below 32°F only for water with added antifreezing fluids
over 212°F only for water with added anti-boiling fluids

Material

	Part	Material	Specification
1	Body	DZR Lead Free Brass	ASTM B927 C27453
2	Seat retainer	Lead Free Brass	ASTM B927 C27450
3	Ball	LF Brass / Cr plated	ASTM B927 C27450
4	Seat	PTFE	-
5	Fixed end	DZR Lead Free Brass	ASTM B927 C27453
6	Stem	DZR Lead Free Brass	ASTM B927 C27453
7	Packing ring	PTFE	-
8	Packing nut	Brass	ASTM B124 C37700
9	Handle	Aluminum	ASTM B85
10	Screw	Steel / Zn plated	ASTM A36
11	Fixed end	DZR Lead Free Brass	ASTM B927 C27453
12	Drain cap gasket	EPDM Perox	NSF approved
13	Drain cap	Brass	ASTM B283 C37700
14	Tie	Rubber	-

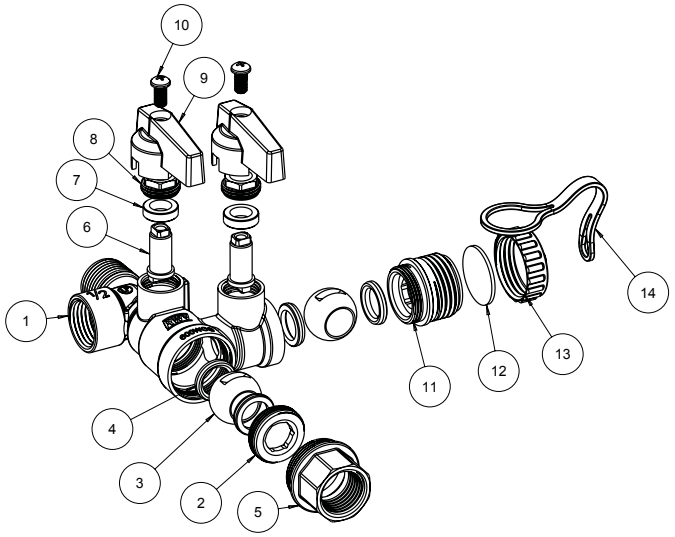

Dimension, Weight

Size	φA [in]	B [in]	C [in]	φD [in]	E [in]	F [in]	H [in]	L [in]	M [in]	N [in]	O [in]	P [in]	Wt. [lb]
½"	½ - 14NPT	0.63	¾-11.5NH	0.50	3.49	1.04	1.58	3.94	2.05	1.89	0.79	0.85	0.92

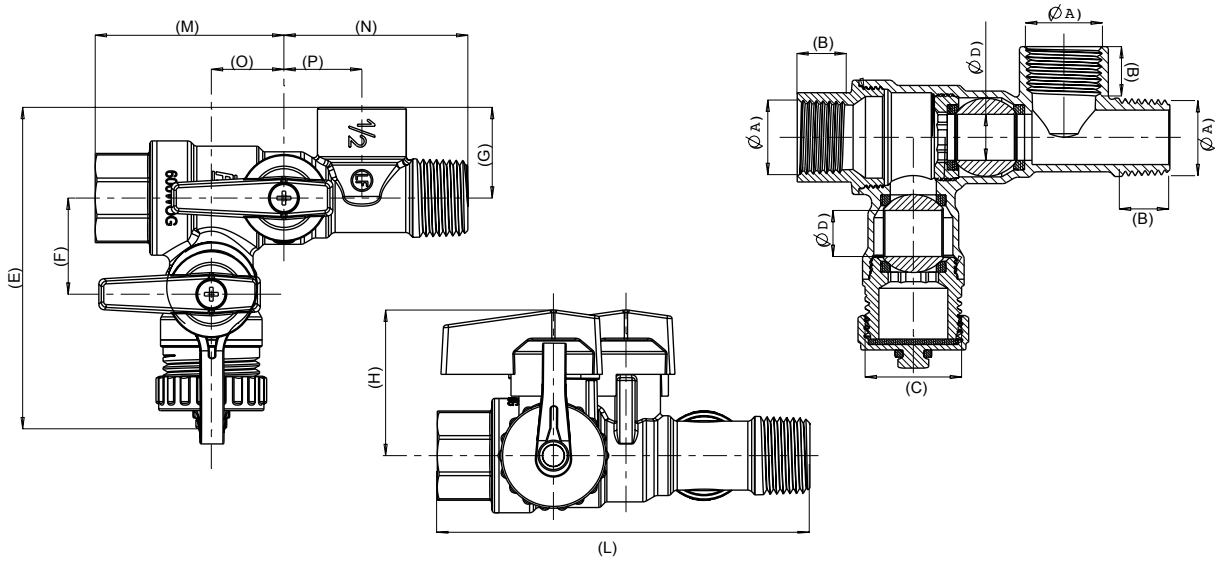

WARNING: This product can expose you to chemicals including lead, which is known to the State of California to cause cancer and birth defects or other reproductive harm. For more information go to www.P65Warnings.ca.gov.

Drawings, photos and data are provided for information only and subject to change without notice. No part of this document may be reproduced, copied, modified or adapted, without the prior written consent of the copyright owner, unless otherwise indicated.
© 2025 RED-WHITE VALVE CORP. All Rights Reserved

8080FT

Expansion Tank Valve

Feature

600# WOG
DZR lead free brass body
Full port design
Chrome plated ball
Ball valve for expansion tank isolation
High flow hose drains with cap and chain
Adjustable packing gland
FNPT system connection
Virgin PTFE seats
Blow-out proof stem



Working conditions:
Water: from 15°F to 260°F
below 32°F only for water with added antifreezing fluids
over 212°F only for water with added anti-boiling fluids

Material

	Part	Material	Specification
1	Body	DZR Lead Free Brass	ASTM B927 C27453
2	Seat retainer	Lead Free Brass	ASTM B927 C27450
3	Ball	LF Brass / Cr plated	ASTM B927 C27450
4	Seat	PTFE	-
5	Fixed end	DZR Lead Free Brass	ASTM B927 C27453
6	Stem	DZR Lead Free Brass	ASTM B927 C27453
7	Packing ring	PTFE	-
8	Packing nut	Brass	ASTM B124 C37700
9	Handle	Aluminum	ASTM B85
10	Screw	Steel / Zn plated	ASTM A36
11	Fixed end	DZR Lead Free Brass	ASTM B927 C27453
12	Drain cap gasket	EPDM Perox	NSF approved
13	Drain cap	Brass	ASTM B283 C37700
14	Tie	Rubber	-

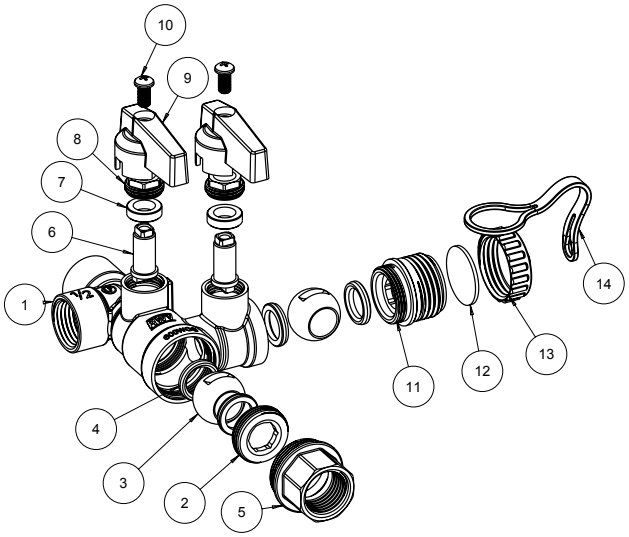

Dimension, Weight

Size	φA [in]	B [in]	C [in]	φD [in]	E [in]	F [in]	H [in]	L [in]	M [in]	N [in]	O [in]	P [in]	Wt. [lb]
½"	½ - 14NPT	0.63	¾-11.5NH	0.50	3.49	1.04	1.58	3.94	2.05	1.89	0.79	0.85	0.92

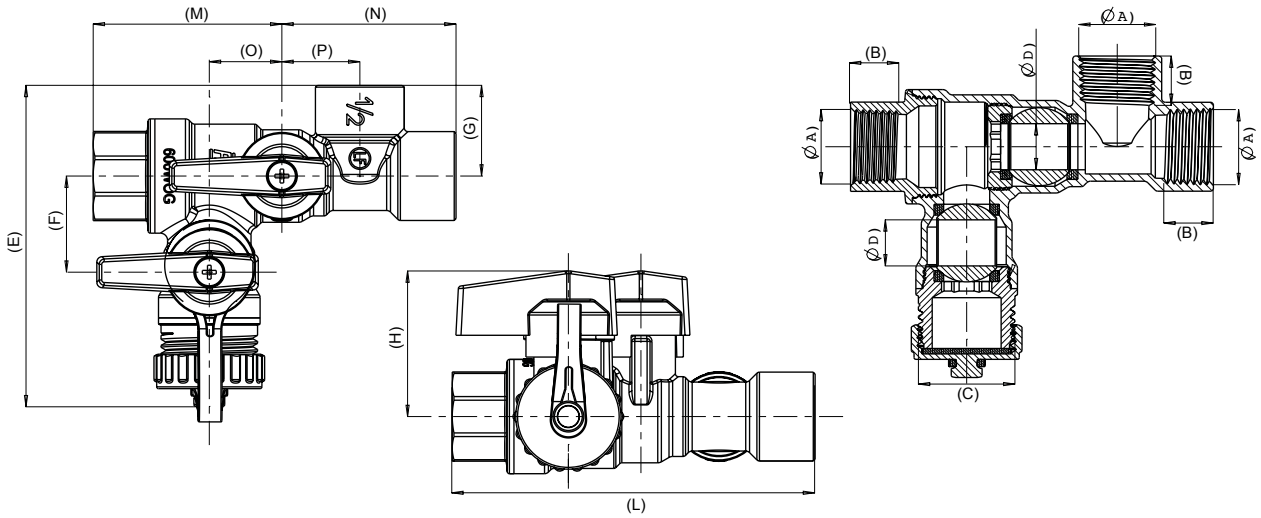

WARNING: This product can expose you to chemicals including lead, which is known to the State of California to cause cancer and birth defects or other reproductive harm. For more information go to www.P65Warnings.ca.gov.

Drawings, photos and data are provided for information only and subject to change without notice. No part of this document may be reproduced, copied, modified or adapted, without the prior written consent of the copyright owner, unless otherwise indicated.
© 2025 RED-WHITE VALVE CORP. All Rights Reserved